THERMODYNAMICS

Vapor Power Cycle

The Carnot Vapour Cycle

The Carnot cycle is the most efficient cycle operating between two specified temperature levels – it adopted as an ideal cycle.

Steam is the **working fluid** in the Carnot vapour cycle. Below we contemplate why this cycle is not a suitable model for a power cycle.

Consider a steady-flow Carnot cycle executed within the saturation dome of a pure substance show in Figure 10-1

Process 1 to 2: **the fluid is heated reversibly and isothermally in a boiler.**

Process 2 to 3: **expanded isentropically in a turbine.**

Process 3 to 4: **condensed reversibly and isothermally in a condenser.**

Process 4 to 1: **compressed isentropically by a compressor to the initial state.**

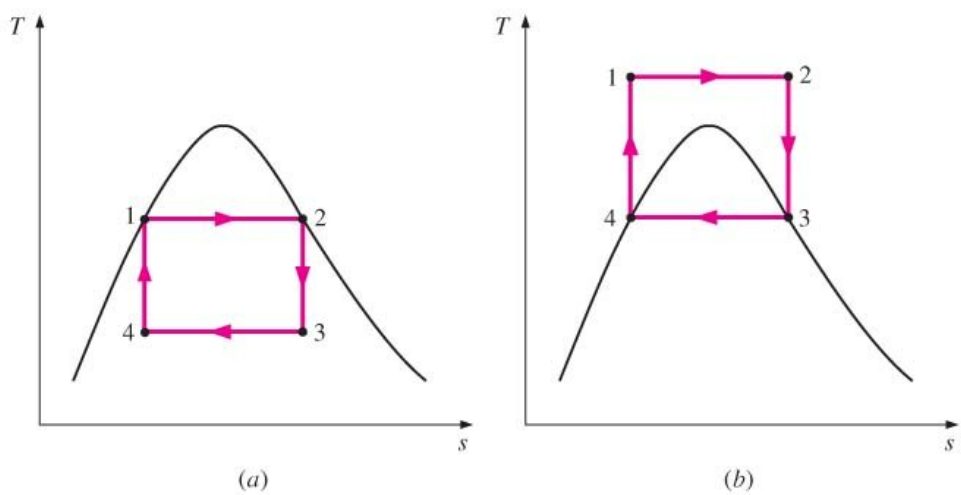

FIGURE 10–1

T-s diagram of two Carnot vapor cycles.

Its impracticalities:

1) Isothermal heat transfer to or from a two phase system is not difficult to achieve in practice since maintaining a constant pressure in the device will automatically fix the temperature at saturation value (process 1 to 2 and process 3 to 4). But limiting the heat transfer process to the two phase system limits thermal efficiency to the cycle.

2) The isentropic expansion process (process 2 to 3) can be approximated closely by a well designed turbine. However, the quality of the steam decreases during this process, as shown on the T-s diagram (a). This is not acceptable as turbines cannot handle steam quality less that 90 percent.

3) The isentropic compression process (process 4 to 1) involves the compression of a liquid – vapour mixture to a saturated liquid. 1) It is not easy to control the condensation process so precisely to achieve state 4. 2) It is not practical to design a compressor that will handle two phases.

Rankine Cycle

The Ideal Cycle for Vapour Power Cycles

The Rankine cycle is the ideal cycle to represent the vapour power plants. It does not involve and internal ireversibilites and consists of the following four processes.

Process 1 to 2: isentropic compression in pump

Process 2 to 3: constant pressure heat addition in a boiler

Process 3 to 4: isentropic expansion in a turbine

Process 4 to 1: constant pressure heat rejection in a condenser

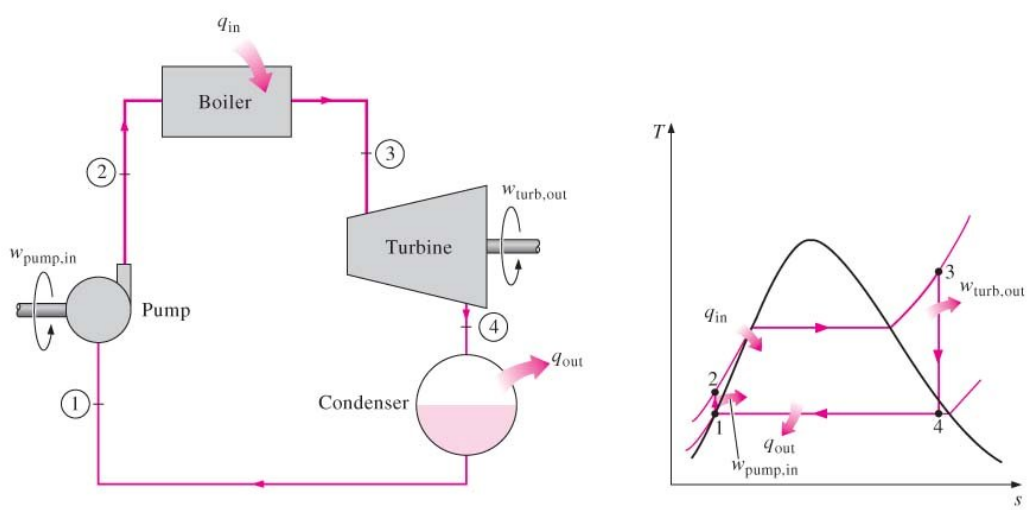

FIGURE 10–2
The simple ideal Rankine cycle.

Energy Analysis of the Ideal Rankine Cycle

The steady flow energy equation power unit mass of steam reduce to (ignoring change in kinetic and potential energy)

$$q - w = \Delta h$$

Process 1 to 2 ($q = 0$):

$$w_{in} = h_2 - h_1$$

Or

$$w_{in} = v(P_2 - P_1)$$

Process 2 to 3 ($w = 0$):

$$q_{in} = h_3 - h_2$$

Process 3 to 4 ($q = 0$):

$$w_{out} = h_3 - h_4$$

Process 4 to 1 ($w = 0$):

$$q_{out} = h_4 - h_1$$

The thermal efficiency of the Rankine cycle is determined from

$$\eta_{th} = \frac{w_{net}}{q_{in}}$$

$$\eta_{th} = 1 - \frac{q_{out}}{q_{in}}$$

Questions

1) Consider a steam power plant operating on the simple ideal Rankine cycle. The steam enters the turbine at 3 MPa and 350°C and is condensed in the condenser at a pressure of 75 kPa. Determine the thermal efficiency of this cycle.
2) A steam power plant uses 3.045 tonne of coal per hour. The steam is fed to a turbine the out of which is 4.1 MA. The calorific value of the coal is 28 MJ/kg. Determine the thermal efficiency of the plant.

3) A steam power plant operates on the Rankine cycle. Steam is delivered from the boiler to the turbine at a pressure of 3.5 MPa and with a temperature of 350 °C. Steam from the turbine exhaust into a condenser at a pressure of 10 kPa. Condensate from the condenser is returned to the boiler by means of a feed-pump. Neglecting losses, Determine:

   (a) Energy supplied in the boiler per kg of steam generated.

   (b) Dryness fraction of the steam entering the condenser

   (c) Rankine efficiency

4) A steam power plant operates between boiler and condenser pressure of 70 bar and 0.5 bar. The temperature of the steam leaving the boiler is 600 °C.

   (a) Sketch the layout of the equipment

   (b) Name the theoretical cycle commonly used to model steam power plants

   (c) Sketch the theoretical cycle on a T-s diagram

   (d) Determine the specific entropy at the beginning and end of the turbine process

   (e) Determine the heat supplied in the boiler

   (f) Determine the work done by the feed pump

   (g) Determine the cycle thermal efficiency

5) In a steam power plant steam leaves the boiler at a pressure of 40 bar and a temperature of 500 °C. An isentropic expansion in the turbine takes the pressure down to 0.05 bar. The steam then enters the condenser and is recirculated in the normal way.

   (a) Sketch the physical layout of the plant using a simple block diagram and name all the major components

   (b) Name the theoretical cycle used to model steam power plant and sketch the cycle on a T-s diagram

   (c) Explain what is meant by isentropic process

   (d) Calculate the specific enthalpy change across each major component

   (e) Calculate the cycle thermal efficiency

Deviation of actual vapour cycle from idealized ones

The actual vapour power cycles differ from the ideal Rankine cycle as shown below, as a result of irreversibilities in various components.

Fluid friction and undesired heat loss to the surroundings are two common sources of irreversibilities.

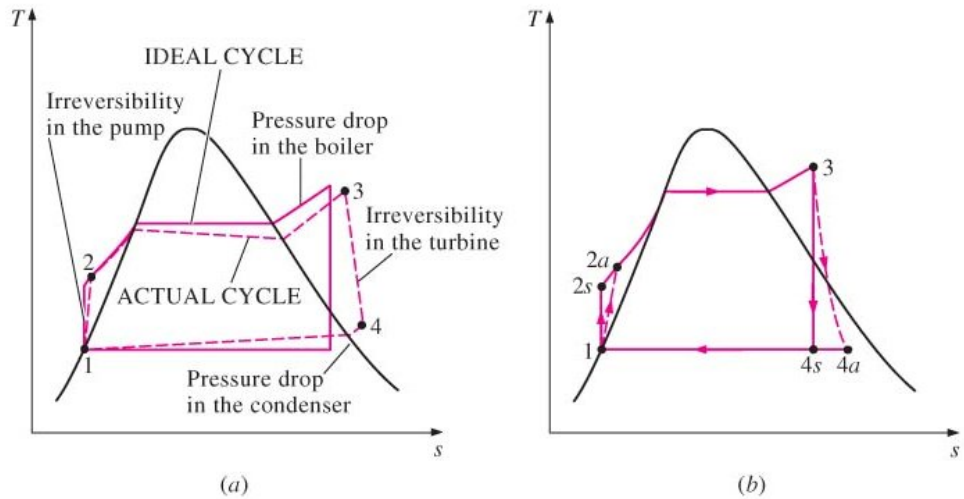

FIGURE 10–4

(*a*) Deviation of actual vapor power cycle from the ideal Rankine cycle. (*b*) The effect of pump and turbine irreversibilities on the ideal Rankine cycle.

- Particular importance are given to the irreversibilities occurring within the pump and turbine. A pump requires greater input and a turbine produces a smaller work output as a result of irreversibilities.
- The deviation of actual pumps and turbines from the isentropic ones can be accounted for by utilising isentropic efficiencies defined as:

Isentropic efficiency for a pump:

$$\eta_P = \frac{h_{2s} - h_1}{h_{2a} - h_1}$$

Isentropic efficiency for a turbine:

$$\eta_T = \frac{h_3 - h_{4a}}{h_3 - h_{4s}}$$

Question

A steam power plant operates on the cycle shown in Fig 10.5. If the adiabatic efficiency of the turbine is 87 percent and the adiabatic efficiency of the pump is 85 percent, determine (a) the thermal efficiency of the cycle and (b) the net power output of the plant for a mass flow rate of 15 kg/s.

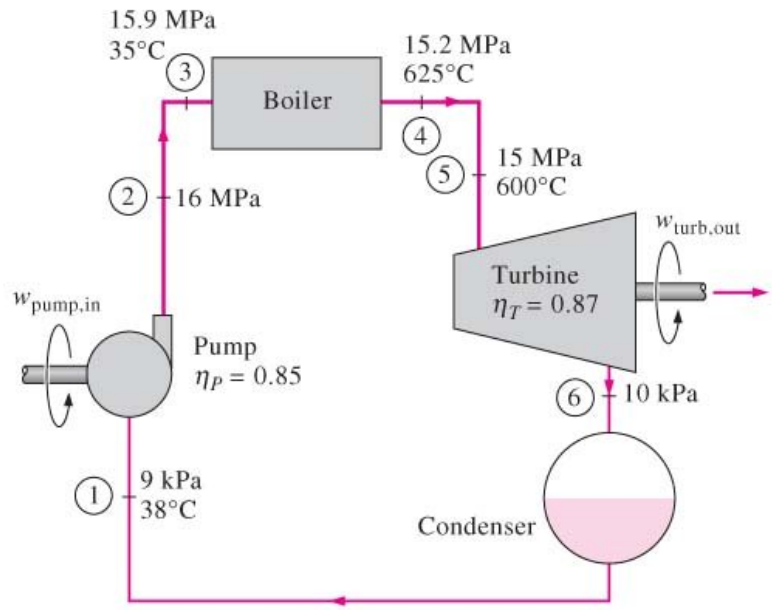

FIGURE 10–5

Schematic and *T-s* diagram for Example 10–2.